Cambridge International AS & A Level

Cambridge International Examinations
Cambridge International Advanced Subsidiary and Advanced Level

CANDIDATE NAME

CENTRE NUMBER

CANDIDATE NUMBER

3241833225

PHYSICS **9702/33**

Paper 3 Advanced Practical Skills 1 **May/June 2016**

2 hours

Candidates answer on the Question Paper.

Additional Materials: As listed in the Confidential Instructions.

READ THESE INSTRUCTIONS FIRST

Write your Centre number, candidate number and name on all the work you hand in.
Write in dark blue or black pen.
You may use an HB pencil for any diagrams or graphs.
Do not use staples, paper clips, glue or correction fluid.
DO **NOT** WRITE IN ANY BARCODES.

Answer **both** questions.
You will be allowed to work with the apparatus for a maximum of one hour for each question.
You are expected to record all your observations as soon as these observations are made, and to plan the presentation of the records so that it is not necessary to make a fair copy of them.
You are reminded of the need for good English and clear presentation in your answers.

Electronic calculators may be used.
You may lose marks if you do not show your working or if you do not use appropriate units.

Additional answer paper and graph paper should be used only if it becomes necessary to do so.

At the end of the examination, fasten all your work securely together.
The number of marks is given in brackets [ ] at the end of each question or part question.

For Examiner's Use	
1	
2	
Total	

This document consists of **12** printed pages.

© UCLES 2016

CAMBRIDGE International Examinations

You may not need to use all of the materials provided.

1 In this experiment, you will investigate a wooden strip acted on by several forces.

(a) (i) Set up the apparatus as shown in Fig. 1.1.

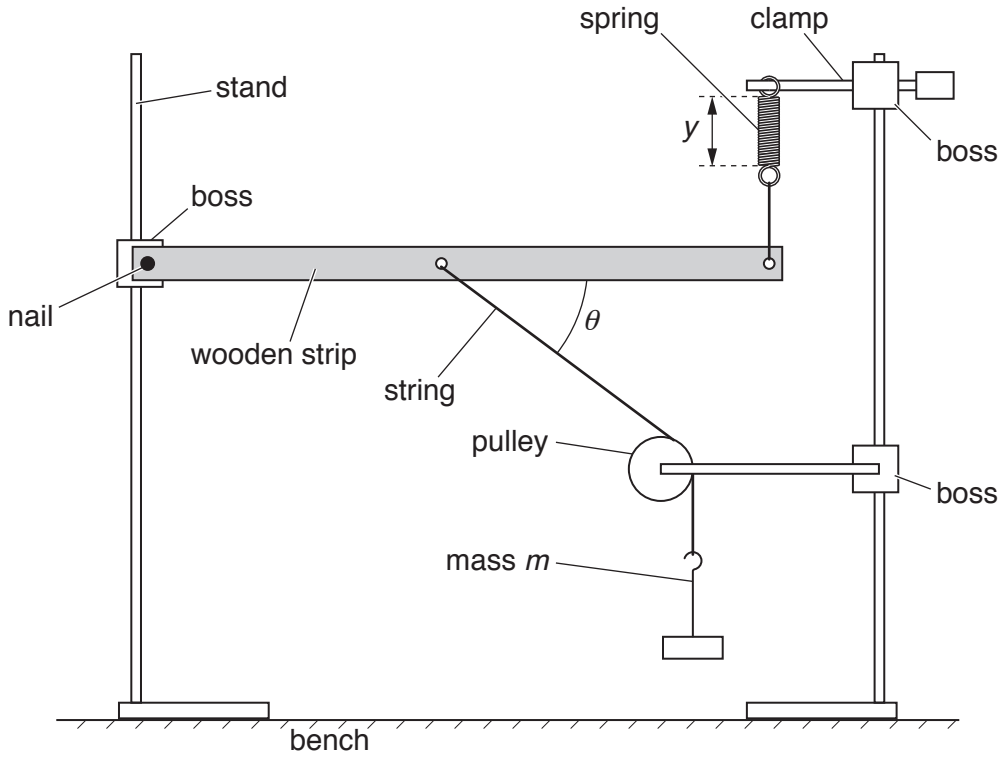

Fig. 1.1

The mass m should be 100 g.

The angle θ between the wooden strip and the string should be approximately 45°.

(ii) Adjust the apparatus so that the spring is vertical and the wooden strip is parallel to the bench.

(b) (i) Record the mass m.

m = ...

(ii) Measure and record the length y of the coiled part of the spring.

y = ...[1]

(iii) Measure and record θ.

θ = ...[1]

(c) (i) Add 100 g to the mass hanger.

(ii) Adjust the height of the boss holding the nail until the wooden strip is parallel to the bench.

(iii) Measure and record m, y and θ.

m = ...

y = ...

θ = ...

© UCLES 2016

[Turn over

(d) Change m and repeat **(c)(ii)** and **(c)(iii)** until you have six sets of values of m, y and θ.

You may include your values from **(b)** and **(c)**.

Include values of $m\sin\theta$ in your table.

[10]

(e) **(i)** Plot a graph of y on the y-axis against $m\sin\theta$ on the x-axis. [3]

(ii) Draw the straight line of best fit. [1]

(iii) Determine the gradient and y-intercept of this line.

gradient = ...

y-intercept = ...

[2]

© UCLES 2016

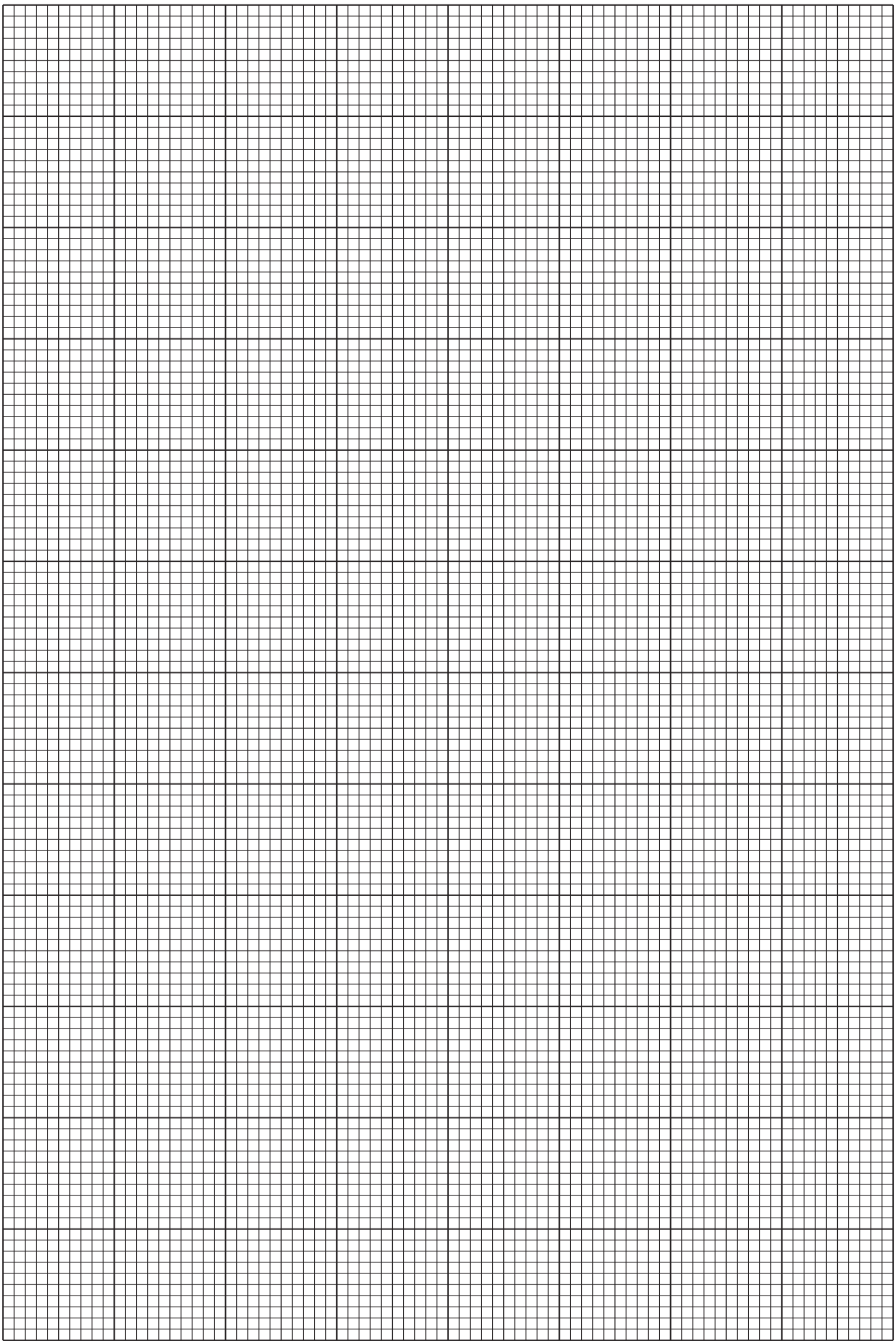

(f) The quantities y, m and θ are related by the equation

$$y = Pm\sin\theta + Q$$

where P and Q are constants.

Using your answers in **(e)(iii)**, determine the values of P and Q.
Give appropriate units.

$P =$ .....

$Q =$ .....

[2]

[Total: 20]

You may not need to use all of the materials provided.

2 In this experiment, you will investigate the movement of a loaded wire.

(a) (i) Take the **shorter** of the two wires.

(ii) Measure and record the diameter d of the wire.

d = ...[1]

(iii) Calculate the cross-sectional area A of the wire using

$$A = \frac{\pi d^2}{4}.$$

A = ...[1]

(b) (i) Secure the hook of the mass hanger to one end of the wire leaving at least 20 cm of excess wire.
The wire may be wrapped around the hook several times.

(ii) Set up the apparatus as shown in Fig. 2.1.

The length *L* of wire between the clip and the hook of the mass hanger should be approximately 15 cm.

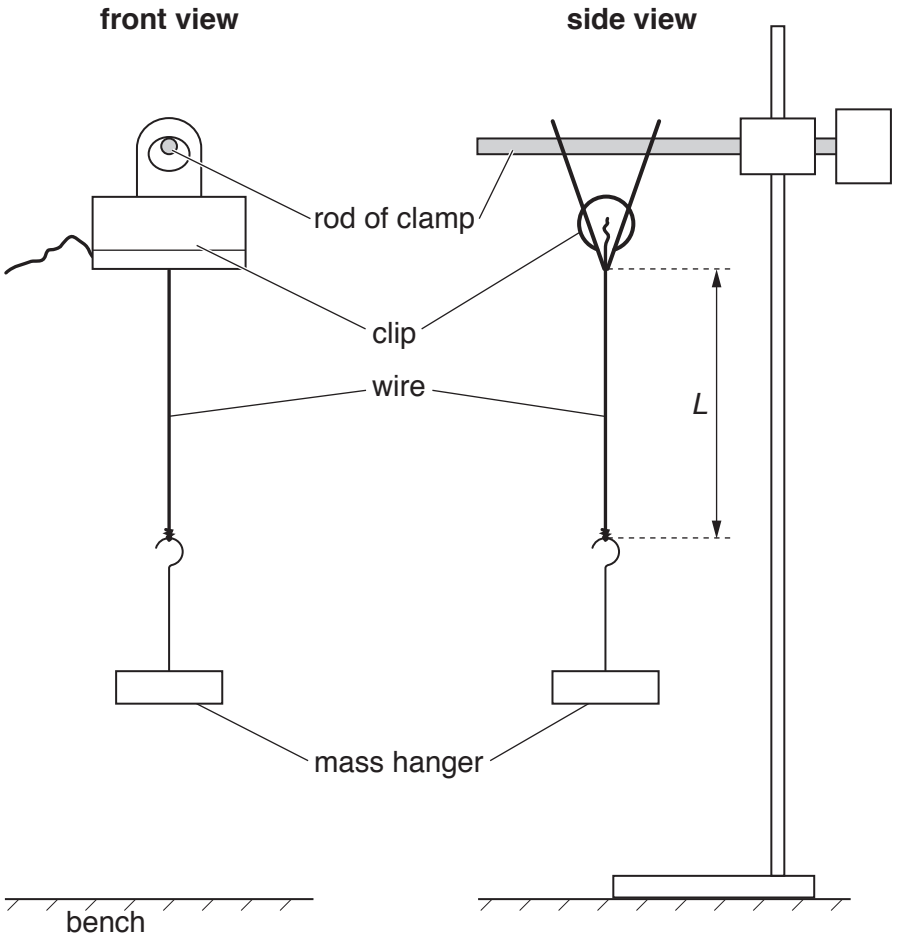

Fig. 2.1

(iii) Measure and record *L*.

L = ...[1]

(iv) Estimate the percentage uncertainty in your value of *L*.

percentage uncertainty = ...[1]

© UCLES 2016

(c) (i) Calculate C where

$$C = \frac{\sqrt{L}}{A}.$$

$C =$ .....[1]

(ii) Justify the number of significant figures that you have given for your value of C.

.....

.....

.....[1]

(d) (i) Twist the mass hanger through approximately 180°.

Release the mass hanger. The mass hanger will oscillate as shown in Fig. 2.2.

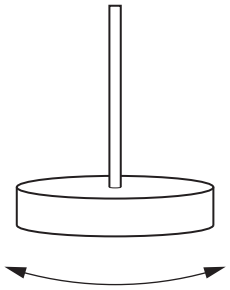

Fig. 2.2

(ii) Take measurements to determine the period T of the oscillations.

Record T.

$T =$ .....[1]

(iii) Remove the wire from the mass hanger.

(e) (i) Take the **longer** wire. Repeat **(a)(ii)** and **(a)(iii)**.

d = ...

A = ...

(ii) Secure the hook of the mass hanger to one end of the wire leaving 40 cm of excess wire.
Repeat **(b)(ii)**, **(b)(iii)**, **(c)(i)** and **(d)** for a value of L of approximately 30 cm.

L = ...

C = ...

T = ...
[3]

(f) It is suggested that the relationship between T and C is

$$T = kC$$

where k is a constant.

(i) Using your data, calculate two values of k.

first value of k = ...

second value of k = ... [1]

(ii) Explain whether your results in **(f)(i)** support the suggested relationship.

.....

.....

.....

.....[1]

(g) (i) Describe four sources of uncertainty or limitations of the procedure for this experiment.

1. .....

.....

2. .....

.....

3. .....

.....

4. .....

.....

[4]

(ii) Describe four improvements that could be made to this experiment. You may suggest the use of other apparatus or different procedures.

1. .....

.....

2. .....

.....

3. .....

.....

4. .....

.....

[4]

[Total: 20]

Permission to reproduce items where third-party owned material protected by copyright is included has been sought and cleared where possible. Every reasonable effort has been made by the publisher (UCLES) to trace copyright holders, but if any items requiring clearance have unwittingly been included, the publisher will be pleased to make amends at the earliest possible opportunity.

To avoid the issue of disclosure of answer-related information to candidates, all copyright acknowledgements are reproduced online in the Cambridge International Examinations Copyright Acknowledgements Booklet. This is produced for each series of examinations and is freely available to download at www.cie.org.uk after the live examination series.

Cambridge International Examinations is part of the Cambridge Assessment Group. Cambridge Assessment is the brand name of University of Cambridge Local Examinations Syndicate (UCLES), which is itself a department of the University of Cambridge.